Current and Future Facility Instruments at the Gemini Observatory

Douglas A. Simons, Joseph B. Jensen, Peter Gray, Manuel Lazo, Rolando Rogers, John White

Gemini Observatory, Northern Operations Center, 670 A'ohoku Place, Hilo HI 96720

ABSTRACT

Gemini's instrument program, which has existed for about a decade, has recently produced enough instruments to fully populate all of the instrument ports on both Gemini-N and Gemini-S. These delivered instruments, as well as those currently under construction and due to be delivered in the next ~2 years, are described in this report. We also summarize the bold new directions Gemini's development program will go in the next 5-10 years, as our Community embarks upon a new science mission to answer some of the most fundamental questions in astronomy.

Keywords: Instrumentation, optical, infrared, detectors, cryogenic

1. OVERVIEW

Over the past two years a significant transformation has occurred in Gemini's instrument program. The long awaited "wave" of instruments has arrived at Gemini-N and Gemini-S, thereby providing enough instrumentation to fully populate all of the instrument ports on both telescopes. This in turn has enabled the beginning of a queue based operations at the Observatory, as we have enough instruments to support observations at a variety of wavelengths and can dynamically remove some instruments for servicing while others remain on-line for science observations. This transformation is an important milestone in an observatory that has matured radically in the past few years. In fact >70% of the time at both telescopes is now spent recording science observations with this array of new instrumentation, the rest of the time split between commissioning new instruments (or modes within existing instruments) or performing engineering activities on the telescopes. While more time will be needed to fully "stabilize" the operation of the Observatory to a truly steady state, the years of hard work spent by Gemini's worldwide set of instrument teams has, with a doubt, transformed the operation of these remarkable facilities since our last SPIE report.

In addition to the delivery of many new instruments, the Observatory has embarked upon the development of a bold new set of instruments through the so-called "Aspen Process". This has been a grass-roots effort, led by the Observatory and its National Offices, to define future research directions that our Community will follow. The Aspen Process is actually a multistage and multifaceted interaction between Gemini's science community, funding agencies, and instrumentation teams to derive a coherent strategic vision for the Observatory which is ultimately designed to answer the most fundamental questions in astronomy. It is far more than a process designed to "simply" make more instruments with marginally improved capabilities. It is a process that will enable previously impossible research at Gemini using innovative, expensive, and potentially risky instrumentation. With an extremely capable core of instruments now available to carry our Community's research through the rest of this decade, the next generation of instruments at Gemini will the allow our Community to navigate "uncharted waters" in a universe brimming with discoveries.

2. RECENTLY DELIVERED INSTRUMENTS

This section focuses on instruments that were delivered since the previous SPIE report (Simons *et al.*[1]; see also Simons *et al.*[2], Gillett *et al.*[3], and Simons *et al.*[4]). Details of Gemini's Near Infrared Imager (NIRI[5]), Multi-object Spectrometer (GMOS[6,7]), facility calibration unit (GCAL[8]) and facility polarization unit (GPOL) can be found in Simons *et al.*[1]. We instead focus here on the Thermal Region Camera and Spectrometer (T-ReCS), bench High Resolution Optical Spectrograph (bHROS), and Gemini Near Infrared Spectrometer (GNIRS), which were recently delivered to Gemini-S, and the facility AO system (ALTAIR) and Mid Infrared Echelle Spectrometer (MICHELLE), which were delivered to Gemini-N. Note that a second GMOS was delivered to Gemini-S during this same time span. Together, 6 instruments arrived at Gemini-N/S over a ~14 month period, leading to incredible demands on the staff at Gemini to keep up with all of the integration and commissioning activities associated with these new instruments.

2.1. Thermal Region Camera and Spectrometer (T-ReCS)

Built by the University of Florida, T-ReCS quickly achieved the status of the most sensitive mid-IR camera system in the world after its deployment at Gemini-S. T-ReCS uses a Raytheon 240x320 Si:As IBC detector, which is sensitive from ~8-25 µm. When used in combination with the high-throughput all reflecting optics in T-ReCS, this instrument provides extremely sensitive imaging with a plate scale of 0.09" per pixel and a field of ~29x22 arcsec. The spectroscopic mode of T-ReCS uses a ~22 arcsec long slit with a pair of gratings. These dispersing elements yield at 10 µm either 0.019 µm/pix (R~100 with 6 µm covered simultaneously, or the entire N band) or 0.0019 µm/pix (R~1000 for 0.6 µm simultaneous wavelength coverage).

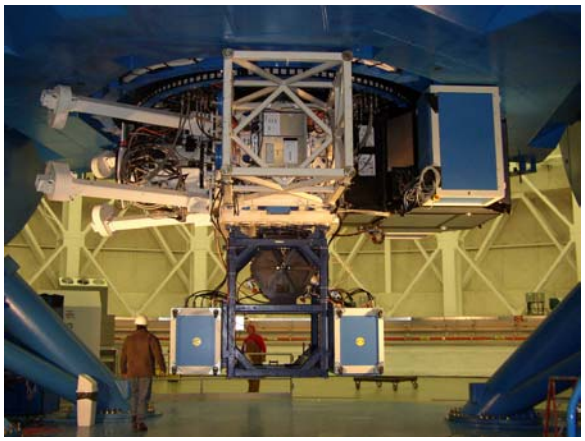

Figure 1 – T-ReCS is shown on the up-looking port at Gemini-N. The cryostat is the small hexagonal structure in the top of the space frame. Mounted below the instrument are a pair of thermal electronics enclosures which help preserve the thermal environment of the telescope's Cassegrain cluster.

Figure 1 shows T-ReCS mounted on the up-looking port at Gemini-S, where it experienced first light in 2003. T-ReCS remains the most compact instrument in the Observatory's suite. Many of the windows in T-ReCS are hygroscopic and are therefore liable to reduce the sensitivity of the instrument if contaminated by exposure to the open air for long periods. To deal with this, the instrument uses a novel window exchange mechanism that helps ensure the availability of a "fresh" (dry) window all the time. The instrument's interior is shown in Figure 2. It relies upon a set of cryogenic motors which feed various drive shafts into a cold light-tight optical chamber which houses all of the optics, baffles, and detector. The optical system is bolted onto opposite sides of the same cold plate in the center of the vacuum jacket, with fold mirrors routing the science beam across both halves of the plate. Unlike most other Gemini instruments, T-ReCS does not incorporate an on-instrument wavefront sensor, instead relying upon having an extremely stiff structure to keep the differential flexure between the detector and facility peripheral guide probes within acceptable limits. As reported in Simons *et al.*[1], residual flexure caused problems during the development phase of the instrument, but this has since been corrected thanks to internal bracing that was retrofitted into the instrument.

Figure 2 – The inside of T-ReCS is shown. At the top is its unique window exchange mechanism. On the inside a number of cryo-motors with feed-throughs to the inner cold optical box are evident.

Gemini's active optics system has unique capabilities when operated in conjunction with mid-infrared instruments. Using one of the telescope's optical peripheral wave front sensors, the telescope's chopping and guiding systems work in concert to provide fast tip-tilt compensation while the secondary is chopping. This has the effect of vastly improving image quality over unguided imaging and, in effect, provides nearly diffraction limited (~0.4" at 10 µm) imaging with T-ReCS most of the time. Failing to have this type of concurrent chopping and fast guiding capability would greatly reduce the spatial resolution and point source sensitivity of the instrument since Gemini, being a light weight infrared optimized telescope, is susceptible to wind shake, and its active optics must function essentially all the time to maintain good image quality.

2.2. Bench High Resolution Optical Spectrometer (bHROS)

About the time T-ReCS arrived in Chile, University College London delivered bHROS to the summit of Cerro Pachon. As shown in Figure 3 bHROS is a fiber fed instrument – the only such instrument in Gemini's set. The instrument resides within the pier lab which provides a vibration free and thermally stable environment to house this R~120,000 spectrometer. bHROS uses a cross dispersed echelle grating to project several orders onto its 4x4k CCD mosaic detector. The blue limit of the instrument's sensitivity is ultimately defined by the transmission characteristics of the fiber system at wavelengths shorter than ~0.5 µm. Beyond being the only fiber fed instrument at Gemini, bHROS is also the only "hybrid" instrument because it uses GMOS to deploy its fiber entrance module. This module fits within a cartridge of similar size to the IFU cartridge used in GMOS and passes most of the GMOS field to its detectors. In this way GMOS, when used as an imager, plays a key role in the acquisition of targets before a precision offset is executed with the telescope to place the target on the entrance pupil a bHROS fiber. GMOS also provides precision guiding during integrations through the use of its on-instrument wavefront sensor during bHROS science observations. From a target acquisition and guiding perspective, this clever use of GMOS makes observations with bHROS similar to normal GMOS spectroscopic observations, which use the same sort of imaging, offsetting, and guiding operations. Even with the bHROS fiber feed system loaded into GMOS, standard MOS, long slit, or imaging observations are still possible (though not simultaneously) with GMOS since the instrument still holds a large number of remotely deployable slit masks. Figure 4 shows the main opto-mechanical components in bHROS. The overall structure rests on a large air cushioned commercial bench and supports an overhead gantry which supports key components including the collimator, filter wheels, exposure meter, and large fused silica cross dispersing gratings. The entire instrument is housed within a light-tight thermally insulated container which helps ensure a dust free environment for the otherwise exposed bHROS optics, even with personnel entering the pier lab on occasion.

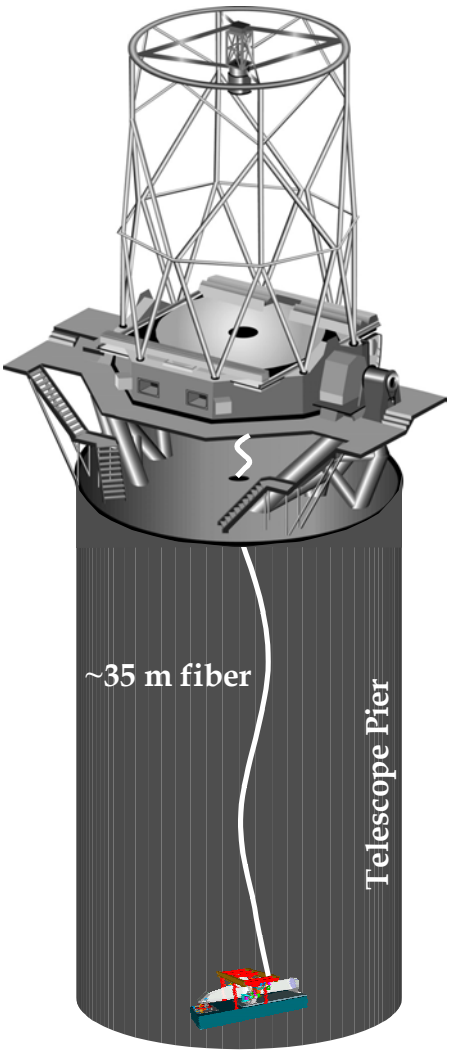

Figure 3 – A schematic of the pathway for the bHROS fiber system, from the ground level pier lab up through the central hole in the telescope's azimuth platform, and ultimately into the GMOS mask assembly, is shown.

After being integrated on Cerro Pachon in mid 2003, tests were conducted soon thereafter to measure the throughput of the instrument using standard stars. Though each of the optical components in the bHROS optical train had its throughput measured, and there was fairly high confidence in the instrument's internal throughput based purely upon those measurements, there has always been some level of concern with the instrument's total throughput given the ~0.9" size of its fiber entrance pupil and the likelihood that its end-to-end throughput would be affected by seeing. Those tests, in combination with some interim troubleshooting performed by UCL to optimize the fiber system's alignment, ultimately led to a peak measured throughput of ~10% under good seeing conditions. At this point bHROS commissioning has been paused while higher priority instrumentation is commissioned. It is expected that bHROS will be made available to the general Community in 2005. Possible upgrades under consideration include retrofitting an iodine cell for precision radial velocity measurements (needed for Doppler planet detection), and a larger format mosaic detector to better sample the echellogram.

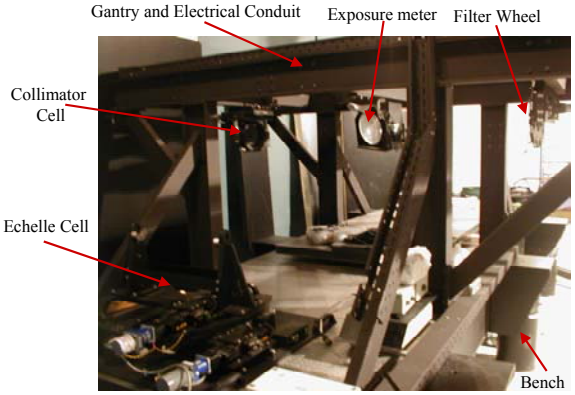

Figure 4 – Many of the bHROS components are shown in this photograph, including the backside of the Echelle cell, the main pneumatically stabilized bench, and several components suspended from the upper gantry assembly.

2.3. Gemini Near-infrared Spectrometer (GNIRS)

In late 2003 GNIRS arrived, the last in the recent series of instruments at Gemini-S. Built by NOAO in Tucson, this much anticipated instrument offers a variety of infrared capabilities that will no doubt support a wide range of scientific observations at Gemini-S. GNIRS was integrated with the telescope and its control system in late 2003, with first light in January 2004. Figure 5 shows GNIRS bolted onto the infrared optimized up-looking port at Gemini-S. The modes offered by GNIRS can be summarized as follows:

- Blue and red optimized cameras with 0.15 and 0.05 arcsec/pix plate scales
- Spectral resolutions of R~2000, 5400, and 18,000
- Near-infrared on-instrument wavefront sensing (OIWFS provided by the University of Hawaii)
- Cross dispersion to sample the entire 1-2.5 μm spectral range (R~2000)
- Spectropolarimetry (using a Wollaston prism)
- Integral field spectroscopy (IFU provided by the University of Durham)

Figure 5 – A picture of GNIRS on the up-looking port on Cerro Pachon, is shown. The characteristic outrigger thermal enclosures are seen to either side of the large cylindrical vacuum jacket which houses Gemini's most complex cryogenic instrument.

To date most modes of GNIRS have been commissioned.

GNIRS uses a type III ALADDIN InSb detector to sense flux from 1-5 μm. This detector is cooled, in conjunction with the rest of the instrument, by 4 separate 100W cold heads which work together with an LN_2 pre-cool system to cool the instrument to its operating temperature (~65K bench temperature, ~29K array temperature) within 4-5 days. The cold structure is a complex assembly that is suspended from a central bulkhead that, on its outside, also ties to the telescope's instrument support structure and the electronic enclosures. Flexure compensation along the length of the cold structure is done via clever use of a passive compensator built into the collimator mirror mount so that, as the instrument is tipped in various directions, the collimator moves slightly to compensate for flexure at the detector.

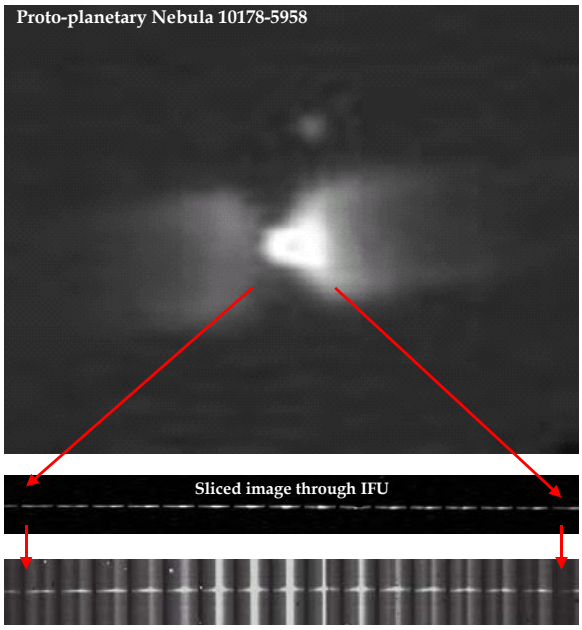

Figure 6 – A sequence illustrating how an image (top) is sliced by the GNIRS integral field unit to produce a set of images passed through the slit (center) which are then dispersed to form a series of spectra (bottom).

Figure 6 shows one of the more complex and scientifically promising modes supported by GNIRS. A cryogenic integral field unit in the instrument transmits a ~3x4 arcsec field that is sliced into a set of separate images that mimic a normal image passed by the spectrometer's foreoptics into the slit. After being dispersed, a set of spectra which completely fill the detector is recorded which can be reconstructed into a series of monochromatic images, in essence yielding a spectrum at each point in the field. This is one of the first applications of such a cryogenic diamond turned *monolithic* IFU structure in an infrared spectrometer. Given the complexity of fabricating and aligning such a complex optical element, the use of this sort of "plug-n-play" design bodes well for developing ever larger IFUs in the future.

2.4. Altitude Conjugated AO System (ALTAIR)

In parallel with the aforementioned instruments being delivered to Gemini-S, the northern facility was also deeply involved in integrating exciting new instrumentation in 2002-03. Again, since the last SPIE report, the first new instrument to arrive was ALTAIR, from the Herzberg Institute of Astrophysics in Victoria. ALTAIR is Gemini's first facility class AO system and, as such, represents a breakthrough in the Observatory's capabilities. As a facility system ALTAIR feeds any instrument mounted on the telescope via the science fold in the acquisition and guidance unit. ALTAIR uses a 12x12 Shack-Hartmann wavefront sensor in its natural guide star mode to measure wavefront errors via guide stars within ±60 arcsec of the field center. NIRI is typically used in conjunction with ALTAIR, though limited use with GMOS has been attempted. Table 1, below, lists the impressive point source sensitivity possible with the combination of ALTAIR and NIRI as a function of natural guide star brightness, offset from the science target, and seeing.

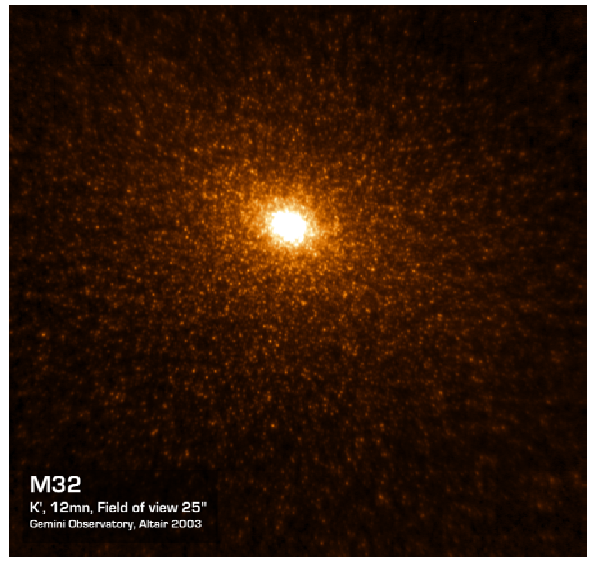

Figure 7 – An example of the type of AO corrected image ALTAIR can deliver is shown. In this case, the core of the galaxy M32 is shown in the K' band pass (2.1 μm) across a 25 arcsec field of view.

ALTAIR proved to be the most complex instrument to integrate into Gemini's control system. This reflects the deep control links needed to efficiently use a facility AO system with a telescope as complex as Gemini. ALTAIR not only feeds wavefront sensing data into the Data Handling System at the telescope, but it also offloads primary mirror figure errors and guiding corrections to the telescope to ensure that its own servo loops remain within their respective dynamic ranges (e.g., tip/tilt mirror throw). Although completing its integration was a tedious process, the net result was an AO system that, when used in conjunction with the Observatory Control System (which in turn operates the telescope and instruments), yields relatively high system efficiency with very little overhead in the initial setup on target fields and their associated guide stars.

Now offered to the general Community with NIRI in both imaging and spectroscopy modes, the next major development thrust for ALTAIR will be completing its laser guide star mode. Implementing this mode involves not only significant modifications to ALTAIR (e.g., installing a LGS wavefront sensor) but also retrofitting a ~15W sodium laser, its associated transfer optics and deployable clean room on the telescope, a laser launch telescope on the back of the secondary mirror assembly, and various safety, diagnostic, and control systems needed to sustain a reliable laser launch system.

Filter	Natural Image Quality (arcsec)	Guide Star (R mag)	Guide Star Distance (arcsec)	Point Source Sensitivity (mag)	Strehl Ratio (%)
J (1.2 μm)	0.4	12	5	24.0	12
	0.6	12	5	22.5	2
		15	5	21.9	0.1
H (1.6 μm)	0.35	12	5	23.9	32
	0.55	12	5	22.8	10
		15	5	21.7	2
K (2.2 μm)	0.35	12	5	23.8	53
	0.55	12	5	23.2	28
			15	22.4	13
		15	5	22.2	10
			15	21.7	5

Table 1 – A list of NIRI + ALTAIR sensitivities is shown as a function of guide star brightness, offset from the science target, and natural seeing. The seeing is given at the zenith; AO performance and seeing degrade somewhat with airmass. The point source sensitivities are for a S/N=5 in one hour of observing on-source.

2.5. Mid Infrared Echelle Spectrometer (MICHELLE)

Built by the UK Astronomy Technology Centre in Edinburgh, and originally designed to be a shared facility class instrument between UKIRT and Gemini-N, a long term loan agreement now makes MICHELLE's "home" Gemini-N. MICHELLE will take advantage of the exceptionally low emissivity, large aperture, and good image quality at Gemini-N to make it about as sensitive as T-ReCS at Gemini-S. The main difference between these instruments, other than the hemispheres in which they are deployed, is the spectral resolution possible with MICHELLE, which has an echelle mode that operates as high as R ~ 30,000. This enables a whole new class of science that can be done uniquely with MICHELLE. To date, only the lower resolution spectral modes of MICHELLE have been commissioned on Gemini (R~1000-3000). Its imaging mode, like T-ReCS, provides diffraction limited observations under most conditions. MICHELLE uses a Raytheon 240x320 IBC detector with switchable well depths to optimize the detector for either broadband imaging or spectroscopic applications. Also like T-ReCS, MICHELLE does not have an on-instrument wavefront sensor and therefore relies exclusively on the facility peripheral sensors for fast tip/tilt compensation, as well as higher order active optics corrections. MICHELLE has a built in polarimetry mode (i.e., that works independently of GPOL – see Simons *et al.*[1]) and calibration system, hence offers extra degrees of versatility compared to T-ReCS in these respects.

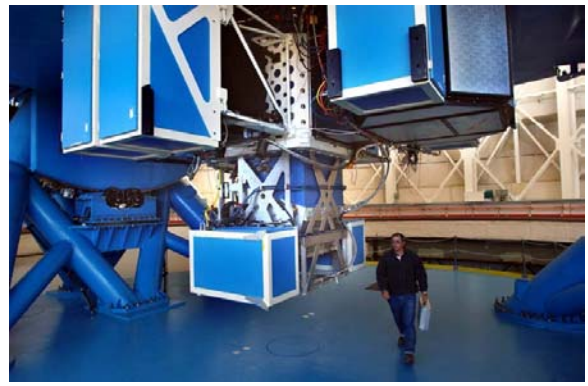

Figure 8 – MICHELLE is shown on the up-looking port at Gemini-N.

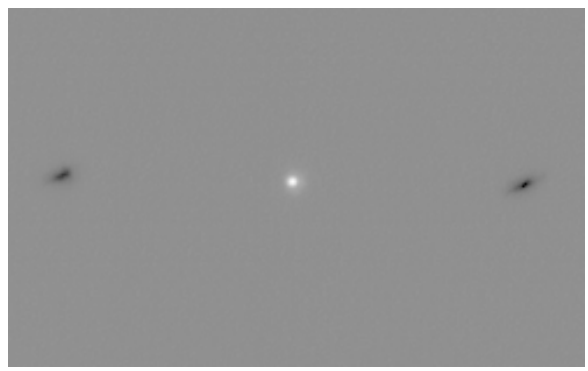

Figure 9 – The effect of fast tip/tilt guiding in a single beam with MICHELLE is shown. The center image was accumulated on the side of the chop throw which used fast guiding, while the other two images were unguided.

Figure 8 shows MICHELLE on the up-looking port at Gemini-N. The familiar mechanical configuration of the vacuum jacket with a pair of thermal electronics enclosures configured as outriggers within the space envelope allowed for instrumentation is evident. MICHELLE does not have a separate pupil imaging mode, hence alignment of the instrument's pupil was done initially on the side port using the science fold to effectively scan the projected pupil across MICHELLE's pupil stop to map out its projected position within the instrument. From there, using NIRI's pupil imaging system and the known offsets in the science fold position between NIRI and MICHELLE, the inner optical assembly of MICHELLE was adjusted to align it properly with respect to the telescope. Though this technique worked it proved to be time consuming and less accurate than alignments achieved with instruments with built-in pupil imaging modes (e.g., NIRI, GNIRS, and T-ReCS).

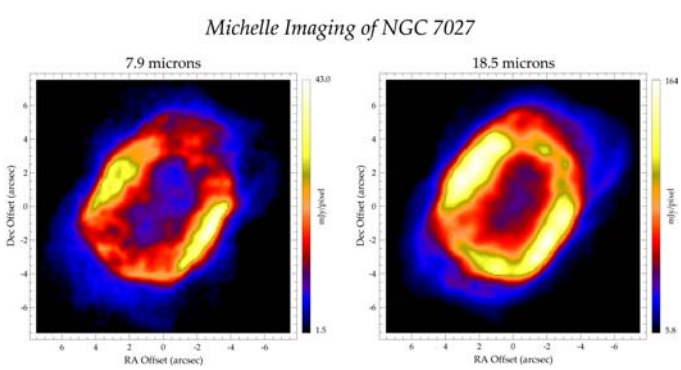

Figure 10 – Images taken during MICHELLE's commissioning period of the planetary nebula NGC 7027 are shown at two MIR wavelengths. The spatial resolution of these images (~0.4") is exceptional, allowing a detailed comparison of the morphological differences of this target at 8 and 18 µm.

Additional observing modes with MICHELLE will be commissioned in the coming months. For example, as mentioned before, Gemini provides fast tip/tilt guiding in combination with chopping. This is currently only supported with a single peripheral wavefront sensor, meaning the image is unguided half the time, reducing efficiency when observing compact objects for which chopping on the detector is used. The effect of this is seen in Figure 9. Including fast guiding on both sides of the chop cycle will significantly boost the on-source sensitivity of the instrument, though this requires the use of both guide probes and two guide stars, which will reduce sky coverage.

3. INSTRUMENTS CURRENTLY UNDER CONSTRUCTION

3.1. Near Infrared Integral Field Spectrometer (NIFS)

Certainly the worst event to occur since the previous SPIE report within Gemini's instrument program was the total destruction of NIFS in the bush fires that devastated Mt. Stromlo in January 2003. Figure 11 below shows the charred remains of the instrument, which was in the integration lab when the fire struck. The instrument was a total loss, with significant portions of its vacuum jacket vaporized by the intense heat of the blaze, allowing the delicate inner optics to be exposed to heat and smoke. NIFS was scheduled to arrive on Mauna Kea roughly 6 months later, hence was in an essentially fully integrated state, undergoing detailed tests. Of course beyond the loss of the instrument was the loss of most of the entire Mt. Stromlo complex, which had enormous value to the both the Australian and international astronomy community.

In stark contrast, this event led to one of the most amazing success stories in Gemini's instrument program. As fate would have it the design documents for NIFS (in electronic format) were removed from the mountain just before the fire struck, meaning all of the detailed design work that had been invested in the instrument was saved. Of course the Mt. Stromlo shops and lab facilities would take a long time to replace, and ANU had just recently been awarded a contract for another Gemini instrument, hence the NIFS prime contractor (Australian National University) quickly subcontracted AUSPACE Limited to use the saved design documents to rebuild the instrument. Figure 12, taken in the lab at AUSPACE, was taken roughly 1 year after the fires destroyed NIFS. The basic cold structure was in place then and cold tests begun – *a remarkable achievement by ANU and AUSPACE by any standard.*

NIFS is now scheduled to arrive at Gemini North in early 2005. It retains all of the design features of the original instrument, including a ~3x3 arcsec integral field unit that feeds an R~5500 spectrometer with an 0.05 arcsec/pixel plate scale. NIFS uses a near-infrared OIWFS that is identical to that in NIRI and GNIRS, which is expected to provide slow flexure compensation (not high speed tip/tilt guiding) given limitations in the readout speed of the HAWAII-1 detector used in this system and image degradation due to anisoplanatism in the field of view available to the OIWFS. This instrument complements the IFUs now available for use with GMOS-N, GMOS-S, and GNIRS in a "package" dedicated exclusively to integral field spectroscopy. In fact, given the field size and plate scale, NIFS is intended to work exclusively with ALTAIR, initially in its NGS implementation and then, in 2006, using the ALTAIR laser guide star mode, to provide access to many more targets across the sky.

Figure 11 – The remnants of NIFS are shown soon after the fires which destroyed the instrument, along with much of Mt. Stromlo.

Figure 12 – Nearly a year later the rebuilt NIFS is shown here, in the lab at AUSPACE in Canberra. NIFS underwent a series of cold tests during the first half of 2004, before being transferred back to ANU for final testing.

3.2. Near Infrared Coronagraphic Imager (NICI)

Excellent progress has been made toward the completion of what is arguably the most highly optimized coronagraph destined for a ground based telescope in the near future. NICI is expected to be commissioned at Gemini-S in 2005. Given its unique capabilities among all ground based instrumentation, as a hybrid between an AO system and dual channel NIR imager, NICI is expected to be quite popular and used for a variety of planet and disk searches around nearby stars.

At the time of this report, NICI has completed its first cold test, which included evaluating the performance of all its mechanisms. Figure 14 shows the fully integrated cryostat being pumped in the Mauna Kea Infrared (MKIR) lab in Hawaii before cold tests were made of its various mechanisms. A number of fairly complex mechanisms are incorporated into the instrument, including filter and dichroic wheels and a precision pupil mask rotator to keep the pupil mask precisely aligned with respect to the projected telescope pupil image. The NICI optics will be installed next, aligned, and then tested cold to evaluate the instrument's image quality.

Figure 15 shows how NICI's AO system will be incorporated into the instrument to feed an AO corrected beam to the occulting mask in the cryostat. NICI will use one of the world's first 85 element curvature sensing AO systems to achieve good correction on relatively faint sources. When combined with the intrinsically clean PSF passed by the telescope (Gemini has a small central obscuration and narrow secondary mirror support vanes), this AO system is expected to provide fairly high-strehl, uniformly structured PSFs. From there the beam is split by a dichroic into two channels, which are imaged by identical camera systems providing 0.02 arcsec/pix plate scales onto a pair of ALADDIN InSb science detectors. The array controller has been configured to precisely synchronize the readout of these 2 detectors to freeze the expected residual atmospheric artifacts ("speckles") in both channels, where they can be substantially removed through differential processing techniques.

NICI represents a highly specialized instrument compared to all the rest built for the Observatory. It will certainly be a tool of discovery and we expect considerable time will be needed to fully understand and appreciate all of the nuances that go into observing with a dual channel differential imager/coronagraph. Like most instruments, upgrade paths exist to further enhance the science that can be supported with the instrument, including a grism spectroscopic mode that can be used to perform low resolution follow-up spectroscopy on faint companions, once detected. It also represents part of a continuum of instruments dedicated to searching for low mass companions orbiting nearby stars (discussed in more depth in section 4).

Figure 13 – One of the NICI subassemblies is shown being lowered into the vacuum jacket. Note the large G10 standoffs. The adaptive optics module is a separate (warm) subassembly which mounts adjacent to the vacuum jacket.

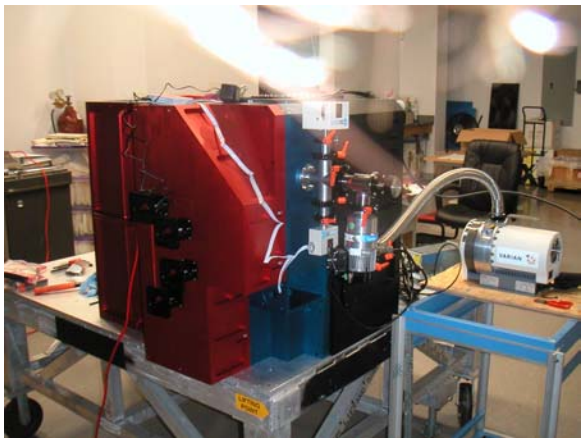

Figure 14 – The assembled instrument is shown here, being pumped down shortly before its first (and successful) cold test, which included all of its mechanisms.

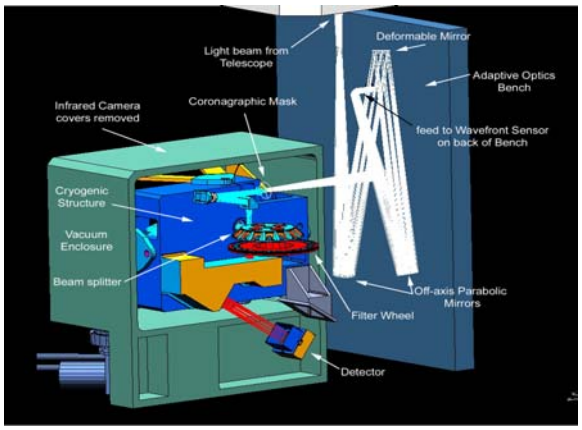

Figure 15 – A CAD rendering of the NICI cryostat, with its pair of cameras, being fed by an external (warm) AO system is shown.

3.3. Florida Multi-object Imaging Near IR Grism Observational Spectrometer (FLAMINGOS-2)

Gemini's first near-infrared MOS is scheduled to be delivered in 2005, where it will join the "ranks" of GMOS. FLAMINGOS-2 will no doubt prove to be an extremely popular instrument, given its rather unique capabilities among multi-object spectrometers available on 8-10 m class telescopes. This instrument, which is being built by the University of Florida, provides either imaging across its ~6 arcmin field of view or multi-object spectroscopy in select bands across the 1-2.5 µm region. The latter will be in a ~2x6 arcmin field and have modest (R~1000 – 3000) spectral resolution. Beyond direct observations at Gemini's f/16 native beam feed, FLAMINGOS-2 is being designed to be compatible with the Multi-conjugate Adaptive Optics (MCAO) system currently under construction, to make it the world's first AO fed fully cryogenic multi-slit NIR spectrometer. In practice this has meant allowing for remote changes in the instrument's cold stop without opening the cryostat, and making sure that the OIWFS plate scale supports both modes of operation. Outside of those areas, design features directly required to operate FLAMINGOS-2 behind MCAO are fairly minor.

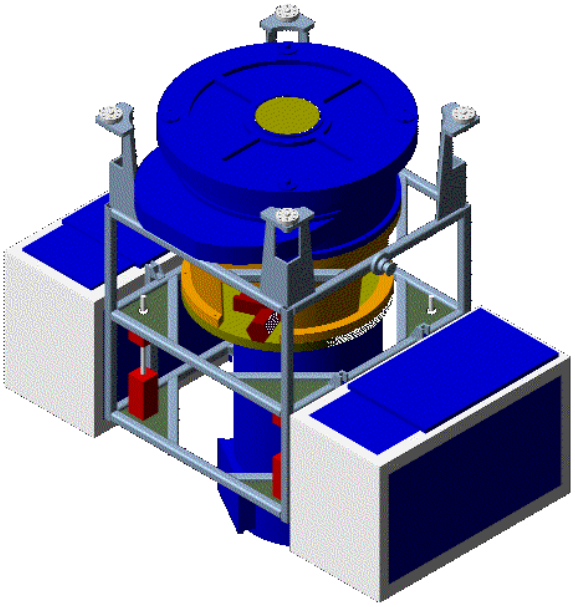

Figure 16 – A CAD rendering of the overall FLAMINGOS-2 assembly is shown. The instrument is in an up-looking perspective, with the 4 mounting pads to the instrument support structure at the top.

The opto-mechanical design of FLAMINGOS-2 draws upon its predecessor, FLAMINGOS-1, in a variety of ways. As seen in Figure 17, the instrument actually consists of 2 dewars. The front dewar houses an on-instrument wavefront sensor that is similar to that used in GMOS (built under subcontract to the Herzberg Institute of Astrophysics), a slit exchange wheel, and a decker wheel to control slit length. The wavefront sensor will provide fast tip/tilt and slow focus compensation for the instrument using the same optical CCD (E2V CCD39) that is used in all of Gemini's optical wavefront sensors. The OIWFS probe arm will be cooled to avoid having thermal radiation leak into the science channel. The entire fore-dewar cold structure is cooled with a closed cycle cooler and heated via a network of power resistors. Masks are loaded into the slit wheel via an external access port after the gate valve separating the two dewars has been closed, the fore-dewar has been warmed, and returned to atmospheric pressure. After new masks have been loaded the process is reversed to provide, through a single-daytime procedure, a new set of ~11 multi-slit masks for another round of observations. The rear of the dewar houses a large set of cryogenic optics which are mounted on a single cold bench – similar in approach to that used for FLAMINGOS-1. Outside of a pair of fold mirrors, the optics use a fairly straightforward all transmissive linear design to map either the f/16 (direct) or f/30 (MCAO) beam onto the instrument's HAWAII-2 detector. Included in this rear dewar is a pupil wheel, filter wheel, and grism wheel.

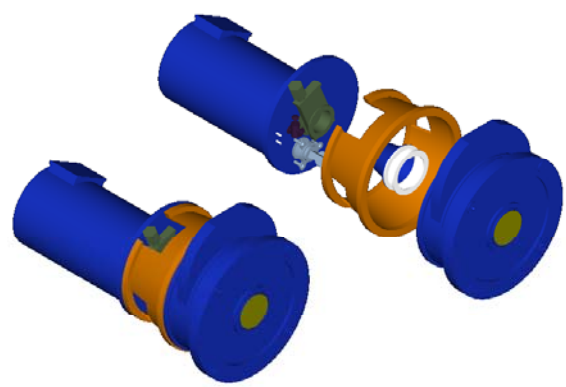

Figure 17 – The FLAMINGOS-2 cryostat splits into several components, as shown above. The MOS fore-dewar is separated from the rear spectrometer dewar by a large gate valve, which enables rapid thermal cycling of the MOS dewar when new slit masks need to be installed.

This design represents an interesting blend of fairly low risk components (borrowing heavily from a previously built instrument). FLAMINGOS-2 is expected to be a unique and very exciting instrument from a science perspective, given how few fully cryogenic NIR multi-object spectrometers have been built to date, and the popularity of their optical "cousins" for years.

3.4. Gemini South Adaptive Optics Imager (GSAOI)

Scheduled to arrive in Chile in 2005 is an imager being developed by the Australian National University for use as the commissioning and science camera for the Gemini-S AO system. GSAOI is arguably one of Gemini's simplest instruments. Nonetheless, it is also one of the most important as it is expected to be a so-called "work horse" instrument for a range of science applications with MCAO. This is the third instrument to make extensive use of design components from NIRI, all in an attempt to reduce cost, risk, and production time. GSAOI uses the same vacuum jacket, space frame, interface plate to the telescope, and much of the same control system as NIRI (and NIFS). While it may look the same on the outside, it is very different on the inside. Figure 18 shows the inner cold opto-mechanical structure. The instrument uses an all transmissive optical design (aside from fold mirrors) to pass an 80×80 arcsec field from MCAO onto its detector assembly. In order to preserve the low wavefront error of the MCAO beam, the intrinsic optical quality of the GSAOI optics is exceptional, with an estimated rms error of 33 nm. No focus adjustment is needed between filters, and a system is provided to measure residual static errors that can be fed back into the MCAO reconstructor to further enhance the overall system performance. This works by remotely inserting doublets which create extra and intra-focal pupil images which are used in a curvature wavefront sensing analysis of the wavefront, as measured by the science detector. A pupil viewer is provided by rotating a simple lens set into the beam (using the same mechanism). As mentioned before, this capability has been found to be crucial for accurate on-telescope alignment. Included are a couple of filter wheels, which together provide space for about two dozen filters.

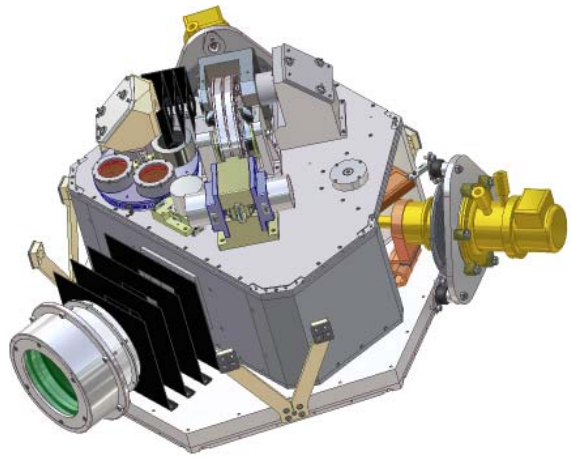

Figure 18 – The inner cold structure of GSAOI is shown. At left is the entrance window and baffles. Light is passed through a folded optical structure that transmits an 80 arcsec field to the detector mosaic, using 0.02 arcsec pixels.

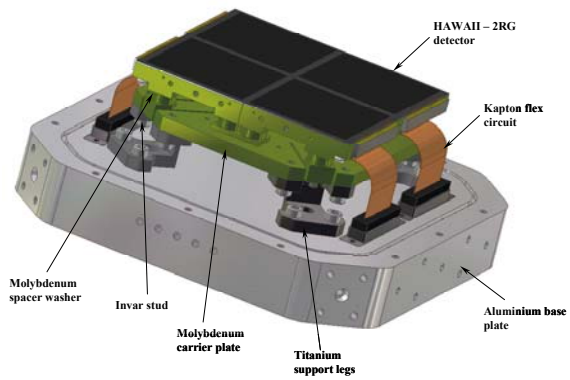

Figure 19 – A close up of the HAWAII-2RG mosaic package is shown. This concept was provide by GL Scientific to mount the Rockwell detectors in a manner similar to how CCDs are mounted in large mosaics, allowing excellent inter-chip registration.

As shown in Figure 19, this instrument contains Gemini's largest infrared focal plane, which consists of four 2048x2048 HAWAII-2RG detectors. These state-of-the-art low-noise detectors provide a wide range of readout modes. Given the expected long integration times, GSAOI will use a relatively simple array controller (SDSU-3) to readout 4 channels from each detector. The outer rows/columns of each detector serve as a bias reference that can be used to correct for low-level bias drifts over long exposure sequences. GSAOI will use the unique on-detector guide window feature of these devices to permit sampling of a subarray in each detector for fast tip/tilt sensing, independent of the operation of the rest of the array. This feature enormously simplifies the instrument by rendering an on-instrument wavefront sensor unnecessary. In practice, given the field size, likelihood of narrow band filters in the science channel, and typical guide star availability probabilities, this feature will probably be used for slow flexure compensation more than fast guiding, but even providing that key function is crucial for the system to preserve high strehl images, all while eliminating the type of otherwise costly and complex cryogenic wavefront sensor that is built into NIRI, GNIRS, and NIFS.

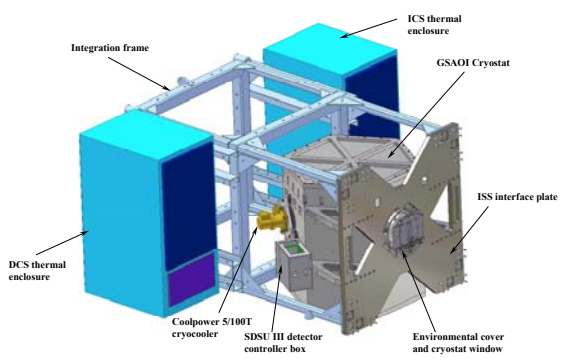

Figure 20 – In a package essentially identical to that used for NIFS and NIRI, GSAOI will bolt onto any instrument port at Gemini-S, where it can be fed by the MCAO corrected beam. The main components have been identified in this CAD rendering.

3.5. Multi-Conjugate Adaptive Optics System (MCAO)

The multi-conjugate AO system planned for deployment on Cerro Pachon in 2006 will be the first of its kind. As described elsewhere in these SPIE Proceedings, the MCAO system will provide relatively wide field correction across much of the sky, using a constellation of 5 sodium laser beacons projected from an optical system mounted on the back of the telescope's secondary mirror support structure. Unlike conventional AO systems, which use a single deformable mirror to correct for turbulence at a particular altitude (generally conjugated to the telescope's entrance pupil), MCAO samples the entire volume contained within the 5 laser beams projected to the sodium layer's altitude to perform a real time tomographic measurement of turbulence along the telescope's line of sight. It then uses 3 deformable mirrors, which operate in series and are conjugated to altitudes of 0, 4.5, and 9 km, to compensate for this turbulence using an algorithm that has been optimized to produce uniform strehl (i.e., constant to within a few percent) across the 1-2 arcmin MCAO field.

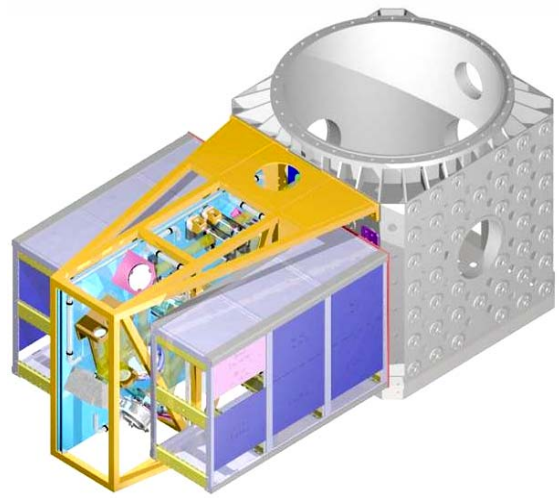

Figure 21 – The mechanical layout of Gemini's MCAO system, when mounted on the side (AO) port is shown. The optics are all mounted off a central bench structure, with side mounted thermally insulated electronics cabinets.

Figure 21 shows the MCAO package. It consists of a bench that is slightly offset from the entrance and exit beams which are centered on the instrument support structure. This bench houses all of the relay optics, wavefront sensors, and deformable mirrors used by MCAO. Adjacent to this bench are a pair of electronic enclosures which house all of the drive electronics, mechanism control electronics, high speed processors, etc. needed to operate the system. Packaging such a complex instrument in a volume that is roughly half that allocated to facility instruments is non-trivial. For example, in order to permit access to the optics, the electronics enclosures will be hinged to retract away from the bench and allow rapid access to the bench.

Of course the "receiver" shown in Figure 21 is only part of the MCAO system. In addition the MCAO system requires a ~50W laser that will likely be mounted on the side of the primary mirror cell and enclosed in a deployable clean room, as is the case for the ALTAIR laser system. A set of beam steering mirrors that are essentially identical to those used for ALTAIR will be used to feed the beam from the solid state laser up the side of the telescope, across the secondary mirror support structure and into a projection system. This projector emits a ~0.5 m wide beam from the back of the telescope that eventually diverges into 5 sodium beacons separated by ~1 arcmin on the sky. To the extent possible this beam projection system will be a replicate of the system being installed at Gemini-N in 2004 to support ALTAIR's LGS mode, in order to reduce cost and complexity.

Tables 2 and 3 below summarize some of the basic performance parameters of Gemini's MCAO system. In addition to the 5 laser guide stars, the MCAO system requires 3 relatively faint stars to determine the low-order tip/tilt and focus corrections. At mid Galactic latitudes, MCAO is expected to provide good sky coverage across ~70% of the sky from J to K. This drops to ~10% under worst case Galactic pole conditions. Importantly, compared to a conventional LGS based AO system (CAO), MCAO provides good sky coverage even at short (J) wavelengths across most of the sky. Opening up the bulk of the sky for AO observations represents a revolution in this technology because, while the science performed by AO systems to date is impressive, it is limited to the availability of natural guide stars and can only be pursued across a few percent of the sky.

% Sky Coverage (CAO/MCAO)	90º latitude	30º latitude
J	7/12	21/67
H	16/14	44/69
K	35/24	74/82

Table 2 – A table of predicted sky coverage at J, H, and K, using conventional AO and multi-conjugate AO is shown.

Field of View (Diameter – arcsec)	J	H	K
MCAO	90	110	120
CAO	20	30	40
Area Gain	20×	13×	9×

Table 3 – A comparison between predicted fields of view for MCAO vs. classical AO is shown, noting (on the bottom row) the relative boost in areal coverage MCAO will provide.

4. NEXT-GENERATION INSTRUMENTATION AT GEMINI

One of the most important changes since the previous SPIE instrumentation report has been the definition of Gemini's future scientific mission, from which flows the next-generation instrument plans at the Observatory. While the details of this instrumentation remain uncertain, the Observatory has recently launched a series of design and feasibility studies to define the cost, risk, technical details, and scientific trades for these new instruments. A much better defined program will be described in the next SPIE report. The origin of these instruments is ultimately linked to a large international meeting in Aspen in June 2003, at which astronomers from the entire Gemini Partnership expressed their visions of what scientific frontiers the Observatory should pursue in the future. The product of that workshop was a set of fundamental questions in astronomy that Gemini's Community would like to answer, via bold new instrumentation. These questions include –

- How do galaxies form?
- What is the nature of dark matter on galactic scales?
- What is the relationship between super-massive black holes and galaxies?
- What is dark energy?
- How did the cosmic "dark age" end?
- How common are extra-solar planets, including Earth-like planets?
- How do star and planetary systems form?
- How do stars process elements into the chemical building blocks of life?

These questions, and the observations using new instrumentation at Gemini that was proposed during the Aspen conference to answer them, are described in depth in the document *Scientific Horizons at the Gemini Observatory: Exploring A Universe of Matter, Energy, and Life,* which is available at www.gemini.edu and links therein.

One of the instruments our Community has expressed an overwhelming demand for is a coronagraph capable of imaging extra-solar planets directly. The past decade has been ripe with discoveries of planets beyond those in our own Solar System through spectroscopic techniques, but the time has come to take this research to the next level. Gemini is positioning itself, by the end of the decade, to both image and spectroscopically characterize gas-giant planets orbiting nearby stars. Observing extra-solar planets will be akin to what Galileo did hundreds of years ago, just on a vastly larger and more distant scale. The technical advancements needed to realize this capability are staggering, because it requires contrast ratios that are orders of magnitude higher than anything achieved to date in coronagraphs. Our Community nonetheless accepts this challenge because it recognizes the strength of Gemini's worldwide ensemble of instrumentation teams, which is uniquely poised to push AO technology and advanced coronagraphic masking techniques to new limits. Along the same vein, our Community has also expressed a strong desire for a new advanced high resolution infrared spectrograph. With its highest spectral resolution of R~70,000, and using a built in wavelength fiducial, we expect this instrument to be able to detect planets approaching a few earth-masses when orbiting low mass brown dwarfs (which have been discovered in great numbers in recent years). When operated in an R~30,000 MOS mode, this same instrument will be able to sample large numbers of young stars in compact stellar nurseries, efficiently mapping their multiplicity fraction, group dynamics, and the debris disks orbiting young stars, as they form new planetary systems. As shown in Figure 22, these magnificent new instruments are part of a continuum of capabilities the Observatory is systematically developing over a 10-15 year period to drive detections of extra-solar planets to ever lower mass regimes. Such legacy-class science will surely impact astronomy for

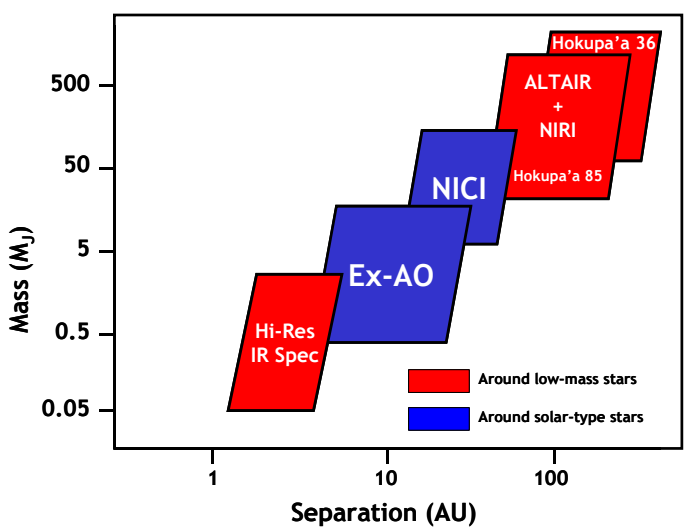

Figure 22 – Some of the new instruments planned for Gemini are key components of strategic development within the Observatory which will enable astronomers to systematically probe to lower and lower mass regimes in the quest to find extra-solar planets.

decades to come. In fact, though the generation of astronomers using these new instruments may not live to see the day that we launch our first interstellar probes, the extra-solar planets they observe may be some of the first targets such deep space probes are programmed to encounter.

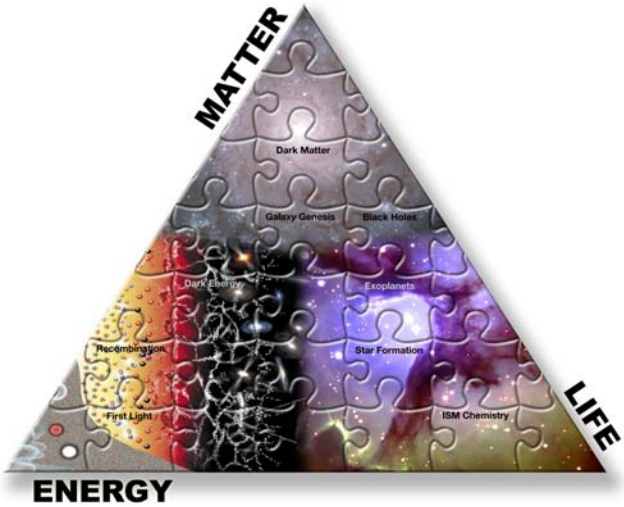

Figure 23 – Symbolically the investigations planned for the next-generation instruments at Gemini resemble a classic jigsaw puzzle, but on a grand scale. Research in modern astronomy will be pivotal in unraveling mysteries like dark matter, first light, and the origins of life. Arguably the most interesting pieces of this puzzle are the ones without labels – the pieces we have yet to discover.

In addition to beginning design studies for a new coronagraph and high resolution infrared spectrometer, the Observatory will be funding feasibility studies of still more technically challenging yet scientifically rewarding instrumentation. One of these includes a new wide field multi-object optical spectrograph, offering a multiplex gain nearly an order of magnitude greater than any spectrometer built to date. The science mission for this incredible machine includes characterizing the time evolution of dark energy, the detailed distribution of dark matter around galaxies, and by recording nearly a million stellar spectra, tracing the "genealogy" of the various stellar constituents that long ago presumably merged to form what we now recognize as the Milky Way. Gemini will also fund a feasibility study in Ground Layer Adaptive Optics (GLAO) – a technology that will potentially yield AO corrected images across much larger fields than MCAO (albeit at lower strehls), which can be used to support wide field high resolution near-infrared imaging and spectroscopy. The GLAO scientific applications include detecting and characterizing "first light" objects, the first luminous objects to populate the Universe not long after the Big Bang on cosmic time scales.

As shown in Figure 23, the basic questions these new instruments are intended to answer can be conceptually grouped into three "Universes" that are inextricably tied together, yet with boundaries and interfaces that are at best only understood in a piecemeal fashion, similar to the early steps in solving a jigsaw puzzle. Only through detailed future observations will we collect enough pieces to understand the most important links, bridges and gaps in the puzzle, and ultimately recognize the picture that represents the actual Universe that we live within. Gemini, as one of the premier ground-based astronomical facilities in the world, will be an important tool in solving this puzzle by implementing the proposed science mission developed by our Community through the "Aspen Process" and by building the next generation instrumentation that will lead our collective research well into the next decade.

5. ACKNOWLEDGEMENTS

The Gemini Observatory is operated by the Association of Universities for Research in Astronomy, Inc., under a cooperative agreement with the NSF on behalf of the Gemini partnership: the National Science Foundation (United States), the Particle Physics and Astronomy Research Council (United Kingdom), the National Research Council (Canada), CONICYT (Chile), the Australian Research Council (Australia), CNPq (Brazil), and CONICET (Argentina).

6. REFERENCES

1. D. A. Simons, D. J. Robertson, C. M. Mountain, "Gemini Telescopes Instrumentation Program", Proc. SPIE Vol. 2475, p. 296, 1995.

2. D. A. Simons, F. C. Gillett, and R. J. McGonegal, "Gemini Instrumentation Program Overview", Proc. SPIE Vol. 2871, pp. 1070-1081, 1997.

3. F. C. Gillett, C. M. Mountain, "Future Gemini Instrumentation", Proc. SPIE Vol. 3354, p. 525, 1998.

4. D. A. Simons, F. C. Gillett, J. M. Oschmann, C. M. Mountain, R. A. Nolan, “The Gemini Instrument Program”, Proc. SPIE Vol. 4008, pp. 28-39, 2000.

5. K.-W. Hodapp, J. Hora, E. Graves, E. M. Irwin, H. Yamada, J. W. Douglass, T. T. Young, L. Robertson, “Gemini Near Infrared Imager (NIRI)”, Proc. SPIE Vol. 4008, pp. 1334-1341, 2000.

6. R. L. Davies, J. R. Allington-Smith, P. Bettess, E. Chadwick, R. Content, G. N. Dodsworth, R. Haynes, D. Lee, I. J. Lewis, J. Webster, E. Atad, S. M. Beard, M. Ellis, P. R. Hastings, P. R. Williams, T. Bond, D. Crampton, T. J. Davidge, M. Fletcher, B. Leckie, C. L. Morbey, R. G. Murowinski, S. Roberts, L. K. Saddlemyer, J. Sebesta, J. R. Stilburn, K. Szeto, “GMOS: The GEMINI Multiple Object Spectrographs”, Proc. SPIE Vol. 2871, pp. 1099-1106, 1997.

7. D. Crampton, J. M. Fletcher, I. Jean, R. G. Murowinski, K. Szeto, C. G. Dickson, I. Hook, K. Laidlaw, T. Purkins, J. R. Allington-Smith, R. L. Davies, “Gemini Multi-Object Spectrograph GMOS: Integration and Tests”, Proc. SPIE Vol. 4008, pp. 114-122, 2000.

8. S. K. Ramsay-Howat, J. W. Harris, D. C. Gostick, K. Laidlaw, N. Kidd, M. Strachan, K. Wilson, Proc. SPIE Vol. 4008, pp. 1351-1360, 2000.